CIRCUIT DIAGRAM:

KVL

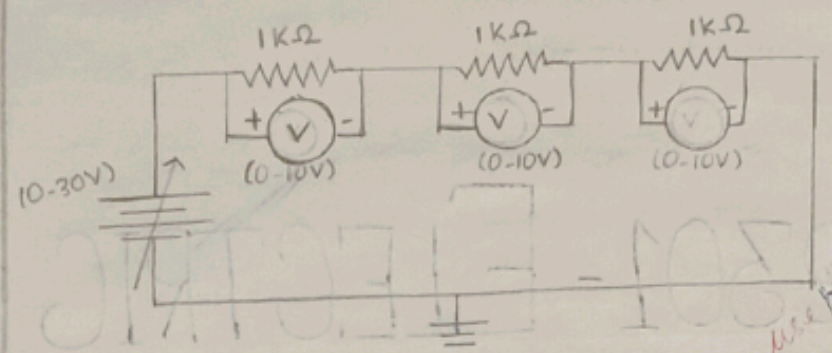

KCL

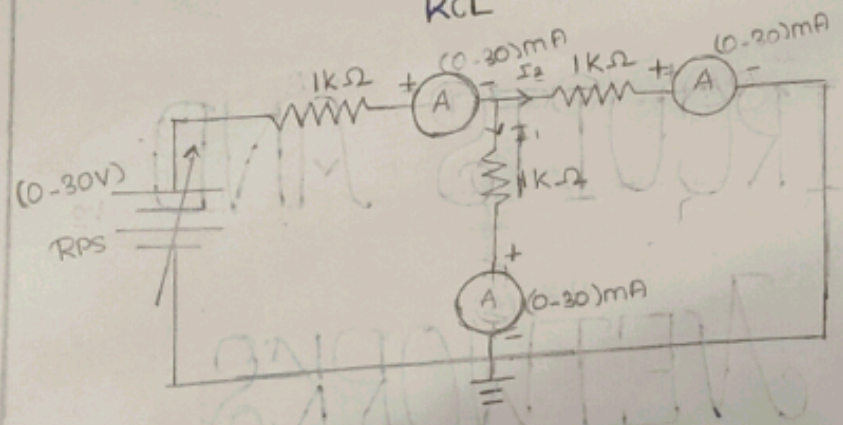

Ex no: 01	VERIFICATION OF KIRCHHOFF'S LAW
Date: 30/01/2026	

AIM:

To verify kirchhoff's voltage law and current law both theoritically and practically for a given DC circuit.

APPARATUS REQUIRED:

S.NO	APPARATUS	SPECIFICATION	QUANTITY
1.	Regulated power supply	(0-30V)	1
2.	Voltmeter	(0-30V) MC	3
3.	Ammeter	(0-10mA) MC	3
4.	Resistor	1KΩ	3
5.	Bread board	–	1

THEORY:

KIRCHHOFF'S CURRENT LAW:

In an electric circuit the algebraic sum of the potential in the closed path is zero.

KIRCHHOFF'S VOLTAGE LAW:

In an electric circuit the algebraic sum

TABULAR COLOUMN :

V VOLTS	V_1	V_2	V_3	$V=V_1+V_2+V_3$ VOLTS	I AMPERE	I_1 mA	I_2 mA	$I=I_1+I_2$ mA
3	1.02	1.03	1.02	3.09	2.09	2.03	1.03	2.06
4	1.37	1.38	1.37	4.12	2.78	1.37	1.38	2.76
6	2.02	2.03	2.01	6.06	4.13	2.04	2.04	4.08

THEORETICAL CALCULATION :

FOR V=3V

KVL :

$R_{equ} = R_1+R_2+R_3 = (1+1+1)\,k\Omega = 3k\Omega$

By Ohm's law :

$I = \frac{V}{R} = \frac{3}{3\times10^3} = 1\times10^{-3}A = 1mA$

$V_1 = R_1 I = 1\times10^3\times1\times10^{-3} = 1V$

$V_2 = R_2 I = 1\times10^3\times1\times10^{-3} = 1V$

$V_3 = R_3 I = 1\times10^3\times1\times10^{-3} = 1V$

$V = V_1+V_2+V_3 = 3V$

KCL : V=3V

$I = \frac{V}{R} = \frac{3V}{1.5\,k\Omega} = 2mA$

PROCEDURE :

i) Give connections as per the circuit diagram.

ii) Switch ON the supply, Vary the RPS and set a particular input voltage.

iii) Note down the readings of ammeters and voltmeters and calculated them.

iv) Vary the RPS for different input voltages and note down the readings for all the meters.

v) Reduce the RPS to its minimum value and switch off the supply.

vi) Using the calculated values, verify kirchhoff's laws practically, and verify it theoretically.

By current division:

$$I_1 = I \cdot \frac{R_2}{R_1+R_2} = 2\times10^{-3} \cdot \frac{1\times10^{3}}{2\times10^{3}}$$

$$I_1 = \frac{2}{2}\times10^{-3}$$

$$I_1 = 1\,mA$$

$$I_2 = I \cdot \frac{R_1}{R_1+R_2} = 1\,mA$$

$$\Rightarrow I = I_1 + I_2 = (1+1)\,mA$$

$$I = 2\,mA$$

MARKS SPLIT-UP:

Sl.NO	DESCRIPTION	MARKS ALOTTED	MARKS OBTAINED
1.	Experimental setup	20 marks	20
2.	Observation / reading	20 marks	20
3.	Calculation / results	20 marks	20
4.	viva	20 marks	~~20~~ 18
5.	Record	20 marks	20
6.	Total	100 marks	98

RESULT:

The Kirchhoff's current rule and voltage rule is verified theoretically and practically.